Hydra POD Schematic (TQFP)

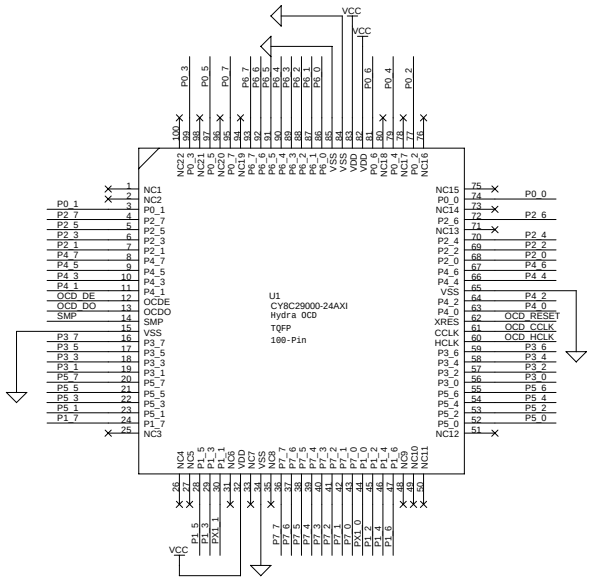

This circuit added to allow for addtion of a precision external crystal.

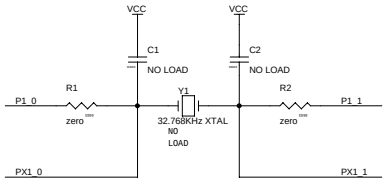

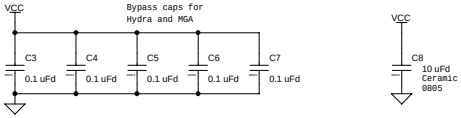

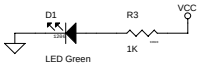

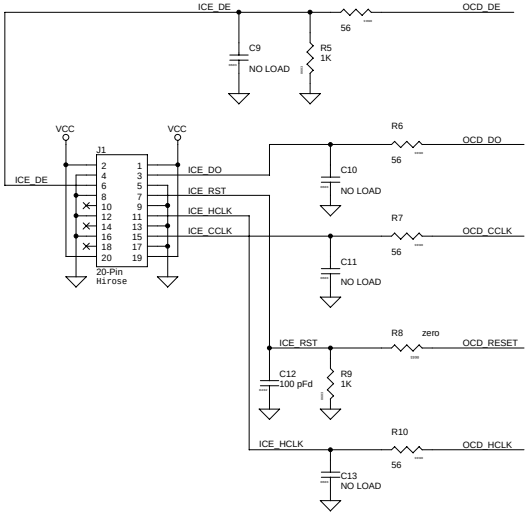

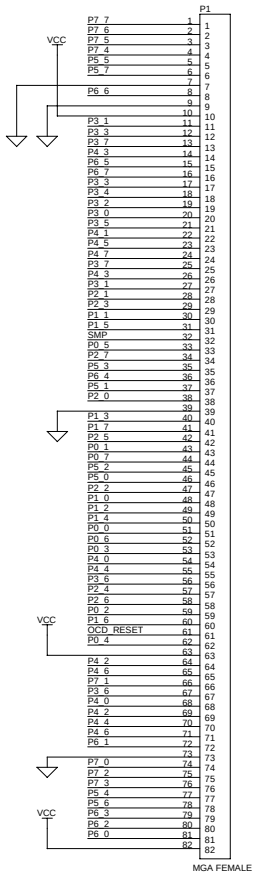

Revision History

Rev 0.1 Original

Rev 0.2, S.Delano, 5/22/06, Refdes modified - J1 was J2, P1 was J1. MGA (P1) pin numbering changed to match PCB.

Rev 0.3 P1 pin 39 was VCC

PCB: PDCR-9322
PCA: 121R-32200

CYPRESS SEMICONDUCTOR © 2005

Title	Hydra TQFP POD	
Size C	Document Number REF-13502	Rev 0.3
Date: Monday, May 22, 2006	Sheet 1 of 1	