Radon Pod Schematic

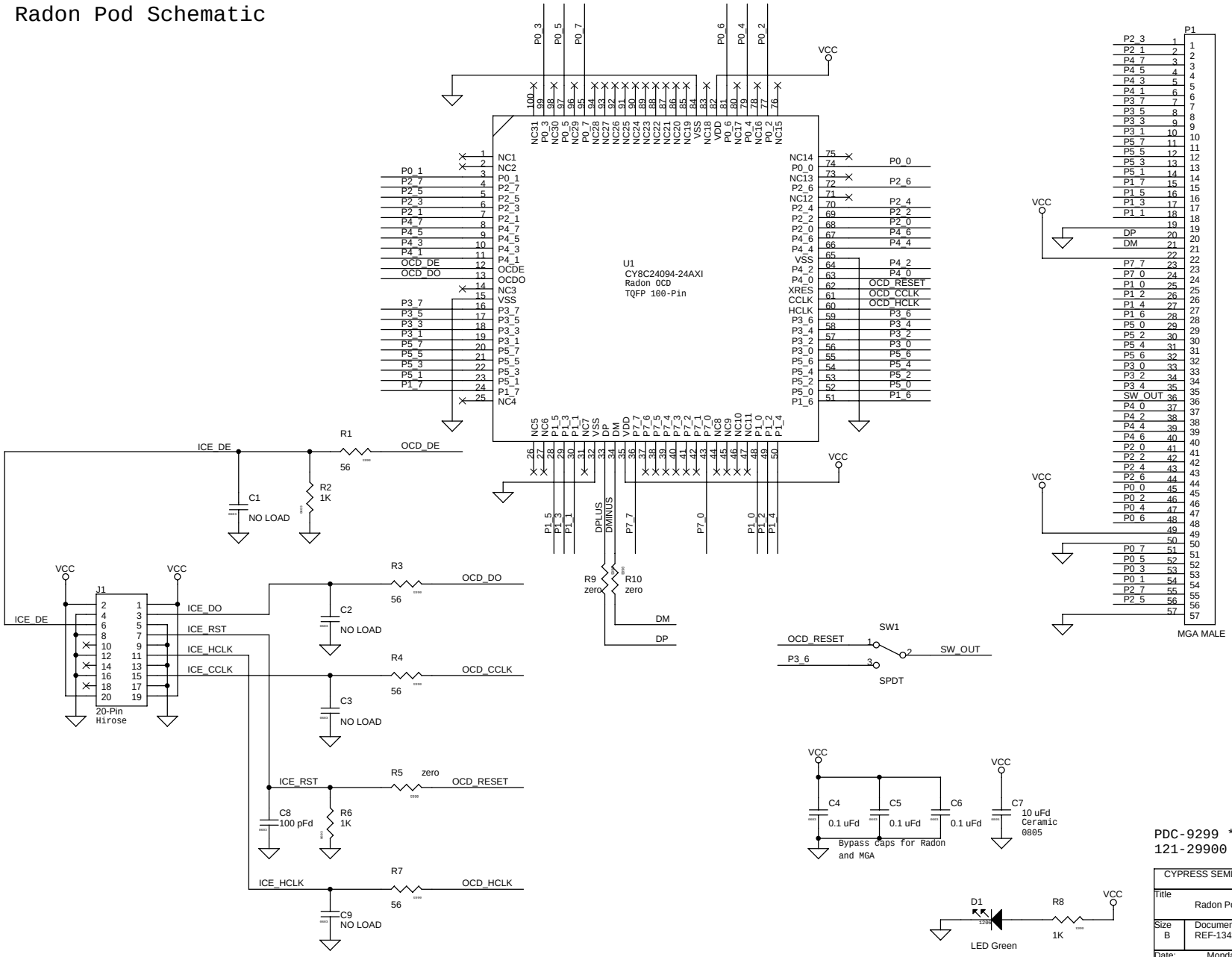

Revision History

Rev 0.1 Original

Rev 0.2 - Changed C8 from an 0402 size to an 0603 size capacitor.

PDC-9299 **
121-29900 *A

CYPRESS SEMICONDUCTOR © 2005

Title	Radon Pod		
Size B	Document Number REF-13435		Rev *A
Date: Monday, April 17, 2006	Sheet 1 of 1		