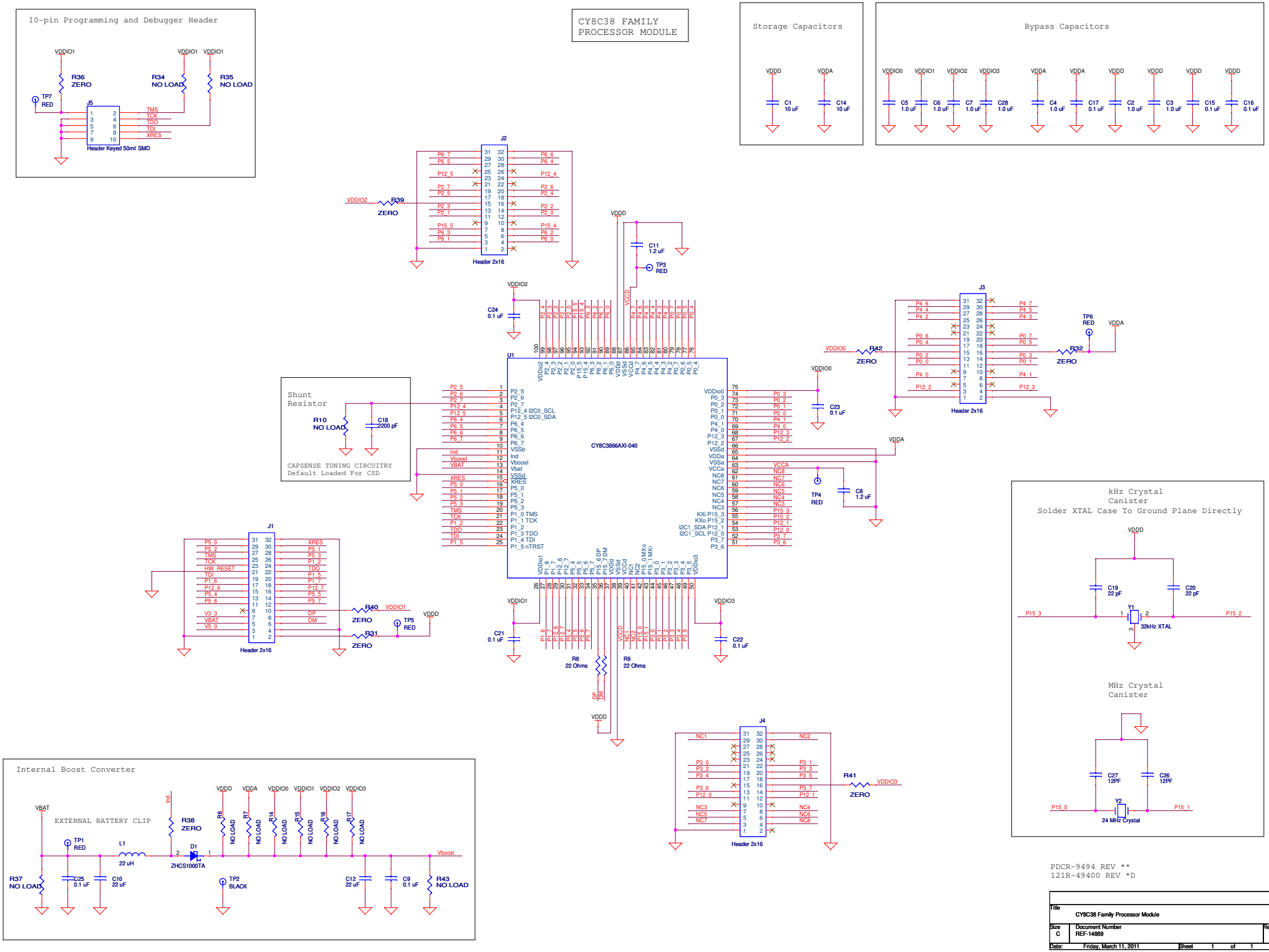
CY8C38 FAMILY
PROCESSOR MODULE
10-pin Programming and Debugger Header
VDDIO1
R36
ZERO
R34
NO LOAD
R35
NO LOAD
TP7
RED
J5
TMS
TCK
TDO
TDI
XRES
Header Keyed 50mil SMD
Storage Capacitors
VDDD
VDDA
C1
10 uF
C14
10 uF
Bypass Capacitors
VDDIO0
VDDIO1
VDDIO2
VDDIO3
VDDA
VDDD
C5
1.0 uF
C6
1.0 uF
C7
1.0 uF
C28
1.0 uF
C4
1.0 uF
C17
0.1 uF
C2
1.0 uF
C3
1.0 uF
C15
0.1 uF
C16
0.1 uF
J2
Header 2x16
VDDIO2
R39
ZERO
C11
1.2 uF
TP3
RED
C24
0.1 uF
U1
CY8C3865AXI-040
Shunt
Resistor
R10
NO LOAD
C18
2200 pF
CAPSENSE TUNING CIRCUITRY
Default Loaded For CSD
J3
Header 2x16
VDDIO0
R42
ZERO
R32
ZERO
TP6
RED
C23
0.1 uF
TP4
RED
C8
1.2 uF
J1
Header 2x16
R40
ZERO
R31
ZERO
VDDIO1
TP5
RED
C21
0.1 uF
C22
0.1 uF
R8
22 Ohms
R9
22 Ohms
J4
Header 2x16
R41
ZERO
VDDIO3
kHz Crystal
Canister
Solder XTAL Case To Ground Plane Directly
C19
22 pF
C20
22 pF
Y1
32kHz XTAL
P15_3
P15_2
MHz Crystal
Canister
C27
12PF
C26
12PF
Y2
24 MHz Crystal
P15_0
P15_1
Internal Boost Converter
VBAT
EXTERNAL BATTERY CLIP
TP1
RED
L1
22 uH
D1
ZHCS1000TA
R38
ZERO
R6
NO LOAD
R7
NO LOAD
R14
NO LOAD
R15
NO LOAD
R16
NO LOAD
R17
NO LOAD
Vboost
R37
NO LOAD
C25
0.1 uF
C10
22 uF
TP2
BLACK
C12
22 uF
C9
0.1 uF
R43
NO LOAD
PDCR-9494 REV **
121R-49400 REV *D
Title
CY8C38 Family Processor Module
Size
C
Document Number
REF-14889
Rev
*D
Date:
Friday, March 11, 2011
Sheet
1
of
1