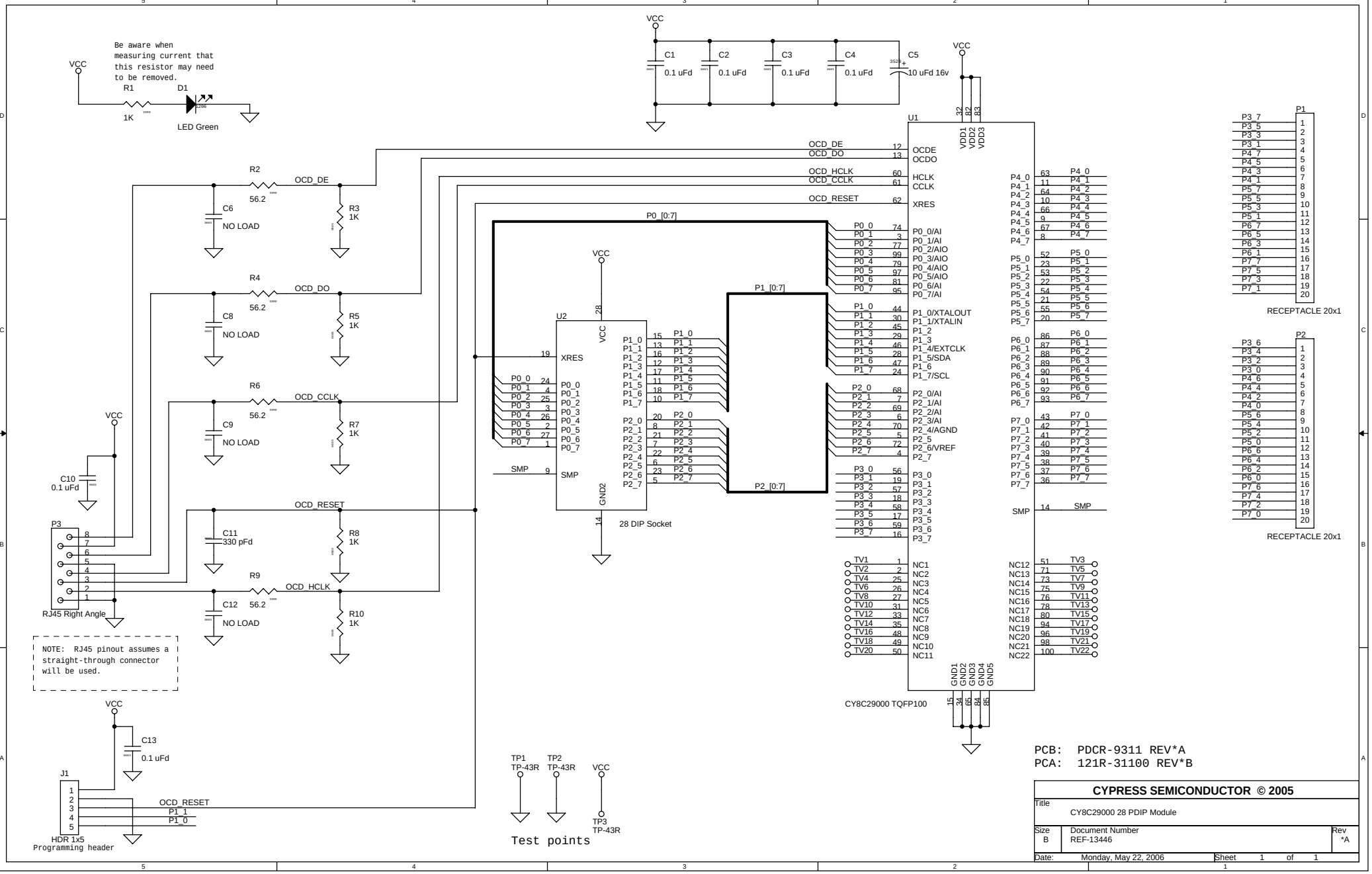
Be aware when measuring current that this resistor may need to be removed.
VCC
R1
1K
D1
LED Green
C1 0.1 uFd
C2 0.1 uFd
C3 0.1 uFd
C4 0.1 uFd
C5 10 uFd 16v
U1
CY8C29000 TQFP100
OCDE
OCDO
HCLK
CCLK
XRES
P0_0/AI
P0_1/AI
P0_2/AIO
P0_3/AIO
P0_4/AIO
P0_5/AIO
P0_6/AI
P0_7/AI
P1_0/XTALOUT
P1_1/XTALIN
P1_4/EXTCLK
P1_5/SDA
P1_7/SCL
P2_0/AI
P2_1/AI
P2_3/AI
P2_4/AGND
P2_6/VREF
SMP
OCD_DE
OCD_DO
OCD_HCLK
OCD_CCLK
OCD_RESET
P0_[0:7]
P1_[0:7]
P2_[0:7]
U2
28 DIP Socket
R2 56.2
R3 1K
R4 56.2
R5 1K
R6 56.2
R7 1K
R8 1K
R9 56.2
R10 1K
C6 NO LOAD
C8 NO LOAD
C9 NO LOAD
C10 0.1 uFd
C11 330 pFd
C12 NO LOAD
C13 0.1 uFd
P3
RJ45 Right Angle
NOTE: RJ45 pinout assumes a straight-through connector will be used.
J1
HDR 1x5
Programming header
TP1 TP-43R
TP2 TP-43R
TP3 TP-43R
Test points
P1
RECEPTACLE 20x1
P2
RECEPTACLE 20x1
PCB: PDCR-9311 REV*A
PCA: 121R-31100 REV*B
CYPRESS SEMICONDUCTOR © 2005
Title
CY8C29000 28 PDIP Module
Size B
Document Number REF-13446
Rev *A
Date: Monday, May 22, 2006
Sheet 1 of 1