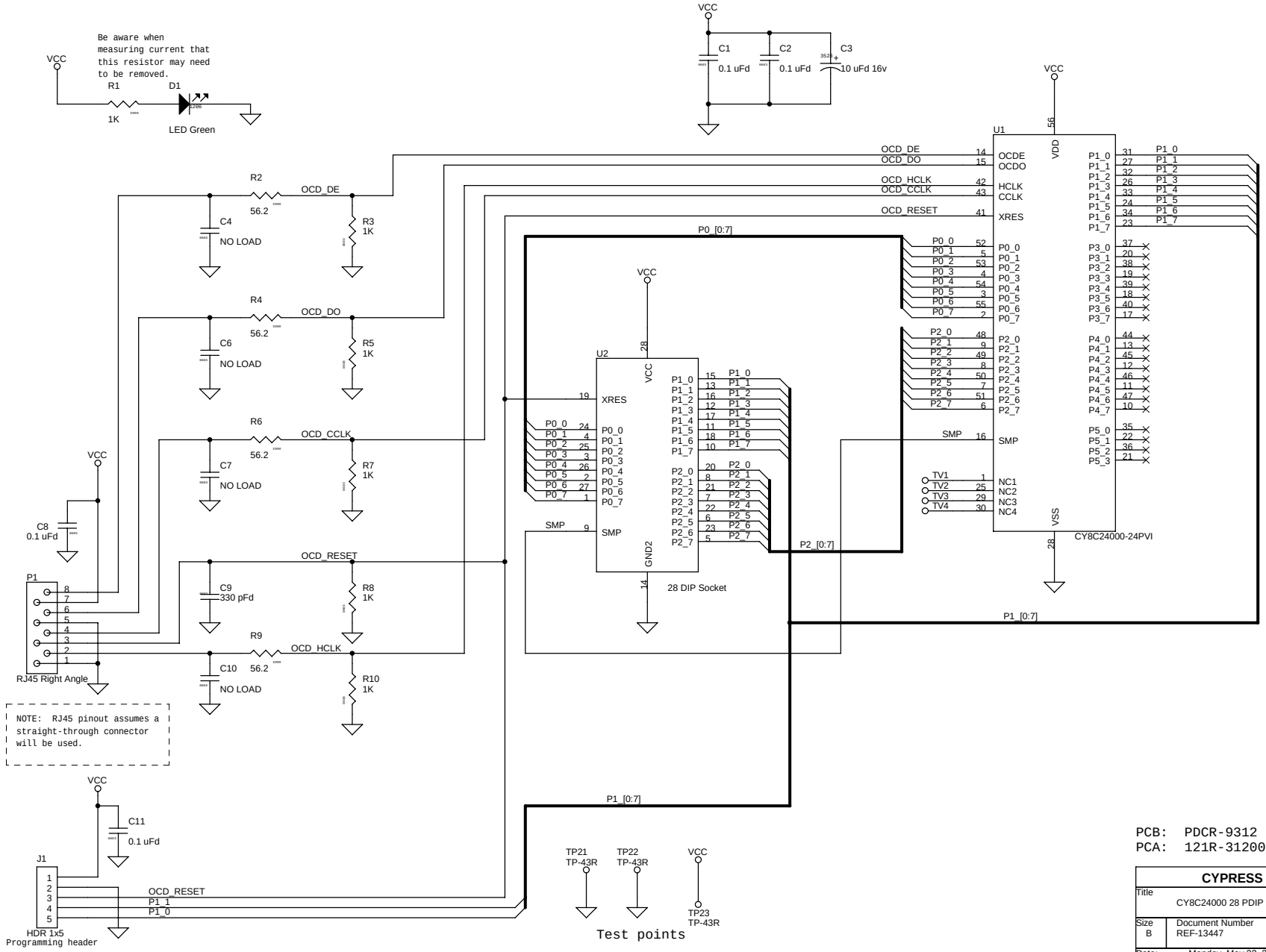
Be aware when measuring current that this resistor may need to be removed.
VCC
R1
1K
D1
LED Green
C1
0.1 uFd
C2
0.1 uFd
C3
10 uFd 16v
U1
CY8C24000-24PVI
OCDE
OCDO
HCLK
CCLK
XRES
SMP
VDD
VSS
NC1
NC2
NC3
NC4
TV1
TV2
TV3
TV4
OCD_DE
OCD_DO
OCD_HCLK
OCD_CCLK
OCD_RESET
P0_[0:7]
P1_[0:7]
P2_[0:7]
R2
56.2
C4
NO LOAD
R3
1K
R4
56.2
C6
NO LOAD
R5
1K
R6
56.2
C7
NO LOAD
R7
1K
R8
1K
R9
56.2
C10
NO LOAD
R10
1K
C8
0.1 uFd
C9
330 pFd
P1
RJ45 Right Angle
NOTE: RJ45 pinout assumes a straight-through connector will be used.
U2
28 DIP Socket
GND2
C11
0.1 uFd
J1
HDR 1x5
Programming header
TP21
TP-43R
TP22
TP-43R
TP23
TP-43R
Test points
PCB: PDCR-9312 REV*A
PCA: 121R-31200 REV*A
CYPRESS SEMICONDUCTOR © 2005
Title
CY8C24000 28 PDIP Module
Size
B
Document Number
REF-13447
Rev
**
Date: Monday, May 22, 2006
Sheet 1 of 1