REVISIONS					
ZONE	REV	ECN	DESCRIPTION	DATE	APPROVED
	**	111202	NEW RELEASE	10/29/01	
	*A	118364	CHG. PKG. BODY TOLERANCE/ADD MOLD CAP & SUBSTRATE DIM./CHG. LEAD COPLANARITY & BALL HEIGHT	08/28/02	
	*B	121986	CHG. MOLD CAP DIM. & SUBSTRATE DIM./CHG. TITLE	11/26/02	
	*C	391420	CHG. COPLANARITY FROM 0.15 TO 0.10	08/11/05	

TOP VIEW

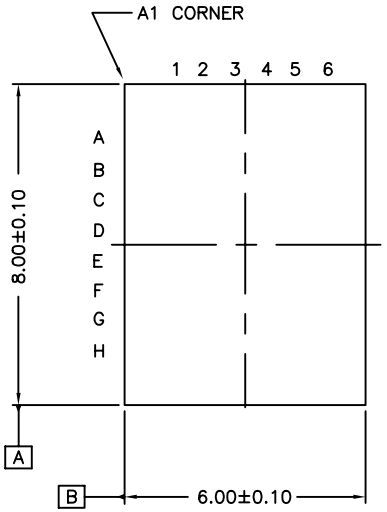

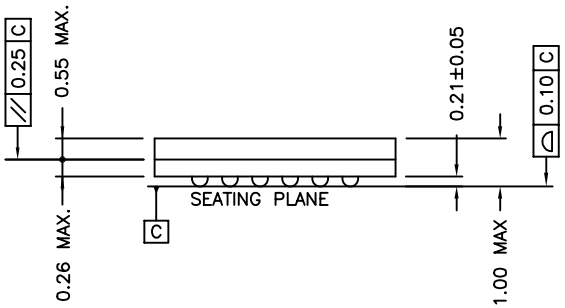

BOTTOM VIEW

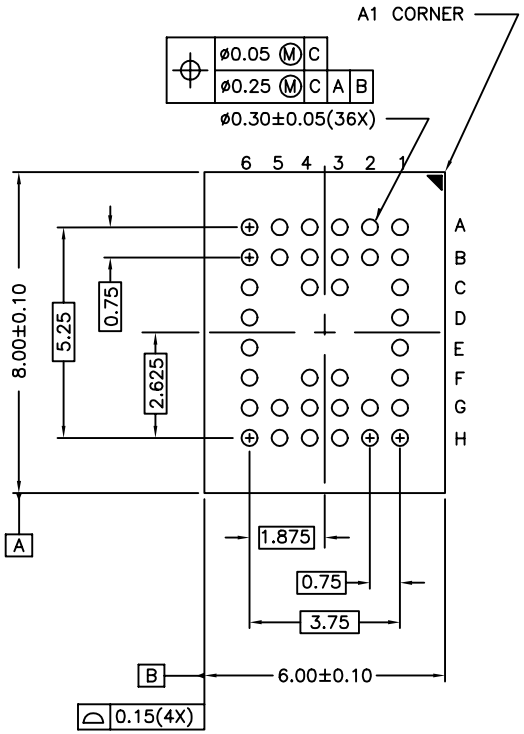

UNLESS OTHERWISE SPECIFIED		
ALL DIMENSIONS ARE IN MILLIMETERS STANDARD TOLERANCES ON:	DESIGNED BY	DATE
DECIMALS: .XX ±, .XXX ±, .XXXX ± — ANGLES ±	DRAWN AGM	DATE 08/11/05
	CHK BY	DATE
	APPROVED BY	DATE
MATERIAL	APPROVED BY	DATE
FINISH		

CYPRESS
COMPANY CONFIDENTIAL

TITLE 36 VFBGA (6x8x1.0MM) PACKAGE OUTLINE

SIZE	PART NO.	DWG NO	REV
A	BV36A	51-85149	*C

SCALE 1: 1 SHEET 1 OF 1

THIS DRAWING CONTAINS INFORMATION WHICH IS THE PROPRIETARY PROPERTY OF CYPRESS COMPANY. THIS DRAWING IS RECEIVED IN CONFIDENCE AND ITS CONTENTS MAY NOT BE DISCLOSED WITHOUT WRITTEN CONSENT OF CYPRESS COMPANY.