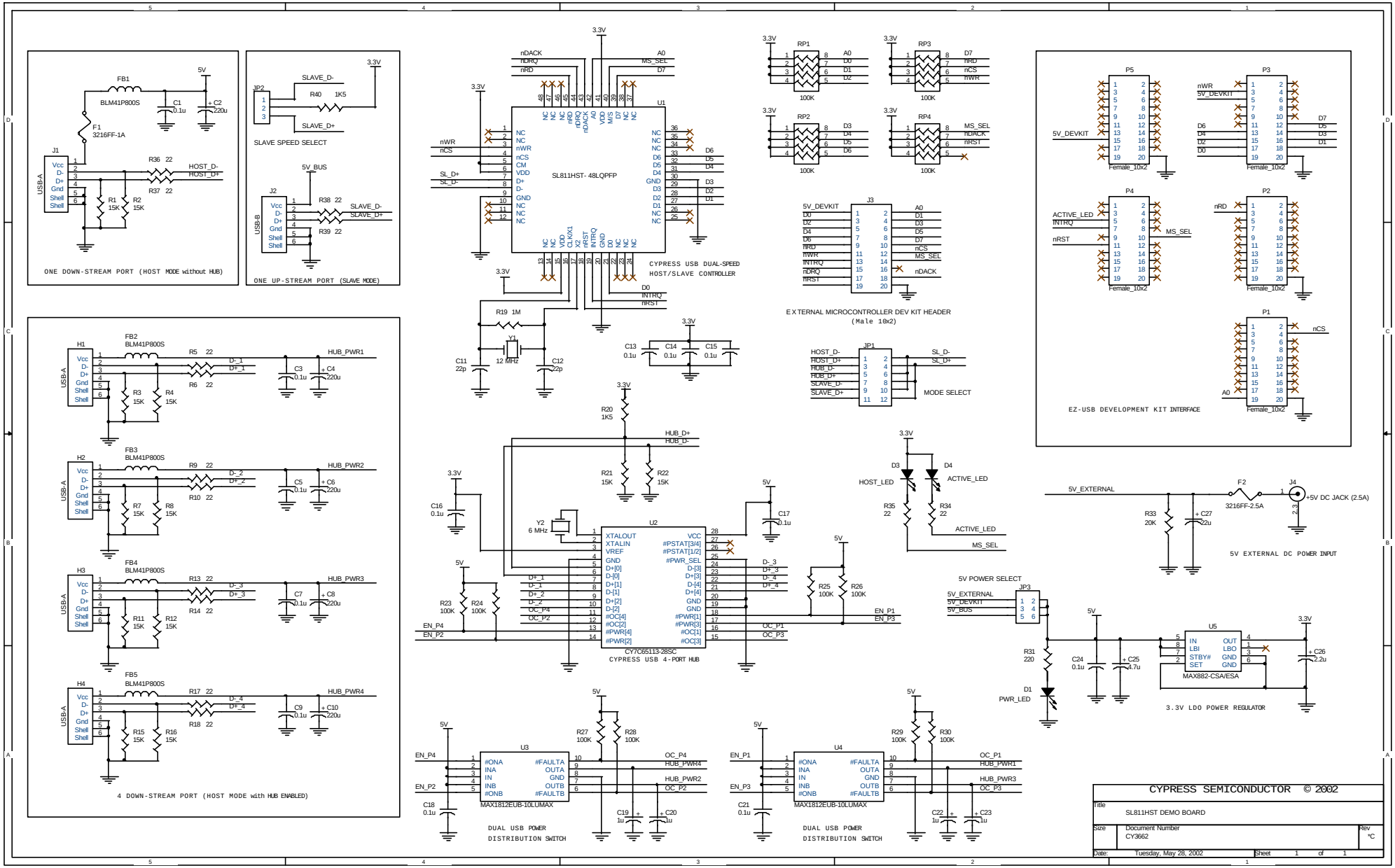
ONE DOWN-STREAM PORT (HOST MODE without HUB)
ONE UP-STREAM PORT (SLAVE MODE)
SLAVE SPEED SELECT
SL811HST- 48LQFP
CYPRESS USB DUAL-SPEED HOST/SLAVE CONTROLLER
EXTERNAL MICROCONTROLLER DEV KIT HEADER (Male 10x2)
EZ-USB DEVELOPMENT KIT INTERFACE
MODE SELECT
CY7C65113-28SC
CYPRESS USB 4-PORT HUB
5V EXTERNAL DC POWER INPUT
5V POWER SELECT
3.3V LDO POWER REGULATOR
4 DOWN-STREAM PORT (HOST MODE with HUB ENABLED)
MAX1812EUB-10LUMAX
DUAL USB POWER DISTRIBUTION SWITCH
CYPRESS SEMICONDUCTOR © 2002
Title
SL811HST DEMO BOARD
Size
Document Number
CY3662
Rev
*C
Date: Tuesday, May 28, 2002
Sheet 1 of 1